Way of working (Type of assembly/part creation)

Introduction

At Atlas Copco, all items, parts, BOM's, etc. have a 10- digit number assigned to it for its reference in our system. For ease of reading, these are often split into 3 groups.

Eg: 4356 1276 89 (4-4-2).

First 4 digits- Unique for every division.

For certain items, we use every number (i.e., 0 to 9), for others, we reserve multiple numbers and take leaps of 100 numbers.

Increments of 1: Here, we use all the digits, and every next part is +1 for its last 2 digits.

Eg: Part A- 1234 5678 03; Part B- 1234 5678 14

Increments of 100: Here, we reserve 100 numbers for every new item and "00" is fixed as the last 2 digit of the serial number.

A jump of 100 numbers is taken to use specific numbering APP system for logical rules and ease of recognition.

Why to follow these rules?

To understand the numbering better both for us and our suppliers at APP.

Overview

These numbers need to be reserved by a user before you can use them.

Start	End	Increment	Purpose
0000 0100 00	0000 0149 99	1	Option
1607 8000 00	1607 8799 99	1	Prototype, T\&I
1607 8800 00	1607 8997 00	100	Layouts, special series
1611 7000 00	1611 8999 00	100	Parts lists, Purchase sets
1816 0000 00	1816 9999 00	100	Parts
2009 0000 00	2009 9999 99	1	Parts EP (boosters)
2019 0000 00	2019 9999 99	1	Parts EP (boosters)
2911 0000 00	2914 8999 99	1	Kits, Spare parts
2914 9000 00	2914 9999 99	1	Service level
5009 0000 00	5009 0799 99	1	Certificates
8059 2100 00	8059 2299 99	1	Options
8092 2500 00	8092 2599 99	1	Sales kits
8162 0100 00	8162 0699 99	1	Products
8162 0700 00	8162 0899 99	1	Products EP (boosters)
8163 0500 00	8163 0599 99	1	Products OFS
9822 0000 00	9822 1399 99	1	Instructions
9822 1400 00	9822 1499 99	1	Circuit diagrams
9822 6000 00	9822 6999 00	100	Software
APP00000000	APP99999999	1	General purpose

Number increase	Edition increase
We use a number increase when the changed part: • Needs to be traceable in production and aftermarket. • Causes the price to change. • Is not backwards compatible.	Edition increases (revisions) are used when, the number increase is not applicable: • Correct small errors on parts/drawings. • Update drawings to current standards. • Align them to what the supplier delivers.

A number increase is defined as using the follow-up number for a new version of a custom APP part for which where 100 numbers are reserved (see table above).

For instance: -

2346 5617 00 becomes 2346 5617 01.

1234 5678 03 becomes 1234 5678 04.

Advantage:

For everyone involved, it is easy to see what drawing/part number the most recent version is, without the need for looking up the items in our systems.

Custom Part

Numbering structure

NOTE: Within these 100 numbers, certain ranges are reserved for certain functions.

- 00-29: Main drawing and follow-up versions (number increases)
- 30-79: Sub-parts of a non-separable assembly (parts of a weld assembly)
- 70-79: Raw casting (without machining)
- 80-99: Assembly (to be purchased or made in production)

Parts, (weld) constructions

Start	End	Purpose	Dedicated drawing
xxxx xxxx 00	xxxx xxxx 29	Part and follow-up versions	Yes (R)
xxxx xxxx 30	xxxx xxxx 79	Sub-parts	No (-)
xxxx xxxx 80	xxxx xxxx 99	Assembly and follow-up versions	Yes (R)

Casted parts

Start	End	Purpose	Dedicated drawing
xxxx xxxx 00	xxxx xxxx 29	Machined casting and follow-up versions	Yes (R)
xxxx xxxx 70	xxxx xxxx 79	Casting and follow-up versions	Yes (R)
xxxx xxxx 80	xxxx xxxx 99	Assembly and follow-up versions	Yes (R)

Past and current number ranges

Range	Period
1615 xxxx xx	???? to 2004
1604 xxxx xx	2004 to 2006
1626 xxxx xx	2006 to 2014
1638 xxxx xx	2014 to 2023
1816 xxxx xx	2023 to now

Example of part with assembly

AAAA AAAA 00	Door assembly
↳ AAAA AAAA 00	Door (welded)
↳ AAAA AAAA 00	Door sub-part
↳ AAAA AAAA 01	Door sub-part
↳ AAAA AAAA 02	Door sub-part
↳ AAAA AAAA 03	Door sub-part
↳ AAAA AAAA 04	Door sub-part
↳ AAAA AAAA 05	Door sub-part
↳ Others	Weld/Rivet nuts
↳ DDDD DDDD 00	Deflic assembly
↳ [illegible] 00	Side plate 1
↳ DDDD DDDD 00	Plate
↳ Others	Weld/Rivet nuts
↳ CCCC CCCC 00	Side plate 2
↳ CCCC CCCC 00	Plate
↳ Others	Weld/Rivet nuts
↳ DDDD DDDD 00	Louver assembly
↳ DDDD DDDD 00	Louver plate
↳ Others	Foam
↳ Others	Rivets
↳ Others	Foam, Locks, Hinges, Seals

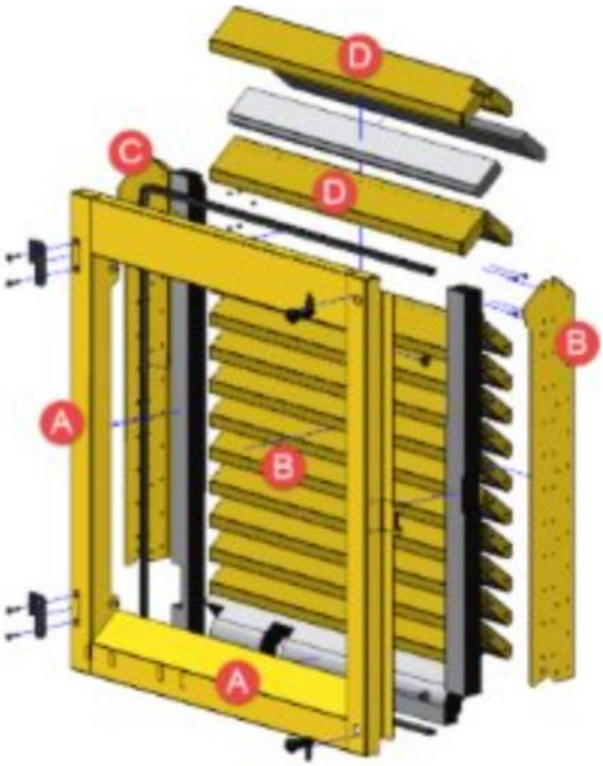

Example of casted with assembly

xxxx xxxx 70	Casting
xxxx xxxx 00	Machined part
xxxx xxxx 00	Assembled part

Alternative if thread inserts are used

xxxx xxxx 70	Casting
xxxx xxxx 00	Machined part
xxxx xxxx 00	Machined part + inserts
xxxx xxxx 00	Assembled part

Purchase sets

Created and released by engineering in 1611-range as C-sets (PART_TYPE_BPCS).
Last 2 digits indicate for the product range.

E.g.- **xxxx xxxx 07 was Seal, xxxx xxxx 20 was for Drillvar.**

The content of purchase sets is defined by production after releasing BOM.
Item Class code for parts is also changed included in the set.

Special numbers

Standard parts (electrical/standard labels)

This series was started to differentiate between old(discontinued) and new number range if the old database came back into the system. So, it becomes easy to distinguish.

Start	End	Status
1607 8522 80	1607 8522 99	Exhausted
1607 8523 80	1607 8523 99	Exhausted
1607 8555 80	1607 8555 99	Current

Labels for sheet labelling

To avoid duplication of work and standardize on label sizes, a number range was created to create reusable labels for label sheets.

- Number range that was started for this is: **1607 8813.**
- Example of a label sheet using this system: **1683 8500 00**

Packaging

Normally supplier drawings and document PDF are used for this in our system.

Start	End	Status
xxxx xxxx xx	xxxx xxxx xx	Overview list of parts, restitution (if needed)
xxxx xxxx xx	xxxx xxxx xx	Wooden base
xxxx xxxx xx	xxxx xxxx xx	Steel packaging parts

Filenames

<u>Parts (3D)</u>

Filename convention for 3D models consists of the 10-digit number plus an extension:

- **-M1**: Model used for 2D drawing
- **-M2**: Variant positions or routings of part
- **-M3**: Variant positions or routings of part

Example: Simple hose assemblies

- **-M1** → Straight hose for drawing
- **-M2, -M3, ...** → Different routings of same hose in layout.

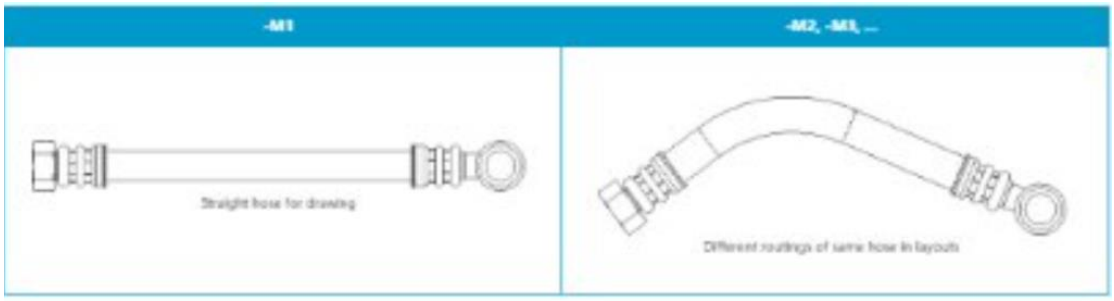

<u>Exception:</u> Metal hose assemblies

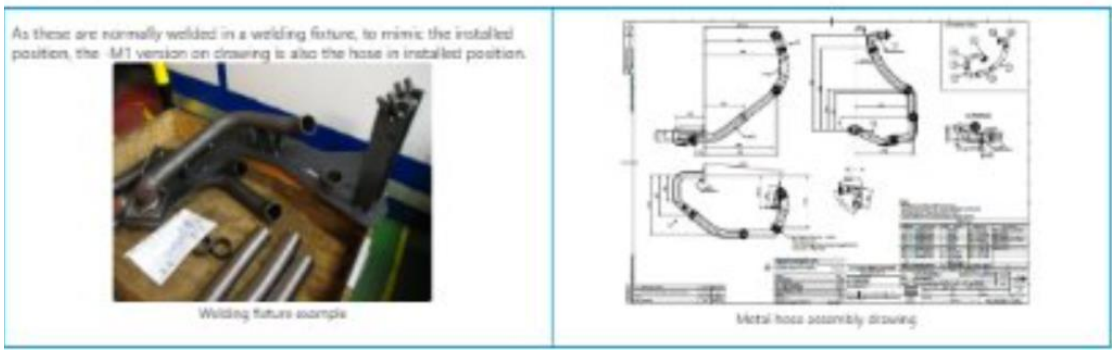

Drawings (2D) and documents

10-digit number + an extension:

- **-01**: Drawing or specification.
- **-03**: Extra documentation or specifications.
- **-43**: Extra documentation or specifications.

Examples

Drawings	Labels
-01: Drawing *(2D with -M1)*	-01: Drawing *(2D with -M1)*
-02: Scope of supply	-02: EPS+AI ZIP file with EPS and AI *(Adobe Illustrator)*
-03: Functional spec	-03: PDF: PDF with layers from Illustrator
-04, -05, ... Certificates (spark arrestor), Installation approval, Mandatory classes...	-04 PNG: PNG image or -04 JPG: JPG image
Example: 1618 1416 00	Example: 1683 8500 00

Reserve numbers (Windchill)

In Windchill numbers need to be reserved through the "Reserve numbers" menu, which can be found in any context folder view.

NOTE:
For numbers that increment by 100, you don't need to reserve 100 numbers!!!
Only 1 is sufficient, as you can only reserve the xxxx xxxx 00 number in these ranges.

Reserve numbers:

1. Click the reserve numbers.
2. Select number range and quantity of numbers.
3. Insert reason—you get the list of numbers reserved for you. If you reserved multiple numbers, copy them to excel.
   You can also choose to have the items created in Windchill, but for 3D parts this is not needed.

Find back reserved numbers:
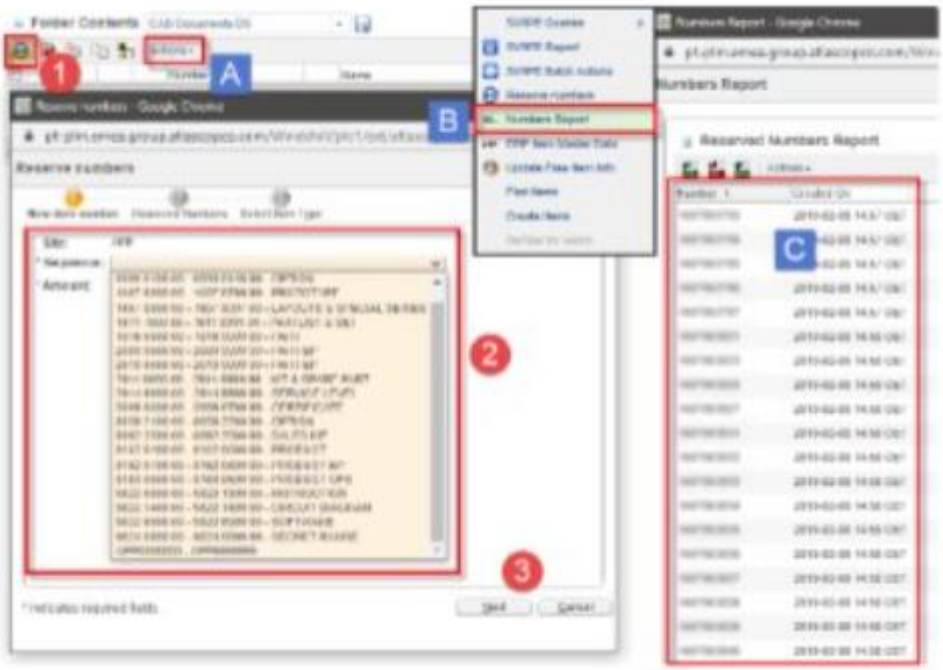
a. Go to Actions menu.
b. Select Numbers Report.
c. List of numbers reserved by your login. These can be saved to excel.